Customized SDH Erbium-Doped Fiber Amplifier

Data Center & Cloud Computing Infrastructure Solutions

Description

The product is a high stability output EDFA. The stability pump optical laser and unique APC (automatic power control) circuit are employed in it as the key component to ensure the high stability and reliability of output power, the unique optical circuit design ensures the excellent optical performance, the high stability and high precision MPU system to ensure the control, adjustment and monitor are intelligent and easy.

Intelligent network management system, perfectly network interface: Ethernet, RS-485 and RS-232 network interface, and the open MIB ensure the connectivity with all other network management system.

Features

- High precise APC circuit
- Low noise figure: < 4.5dB
- Intelligent Temperature Control System
- Compatible with BellcoreGR-1312-CORE request
- High-performance dual-pluggable power supply
- High stability and reliability: MTBF＞150000 hours

Applications

- Optical Distribution System
- Video optical transmission system
- SDH, ATM long distance transmission

Product Specifications

Parameters	Symb	Min	Typ	Max
Operating Wavelength (nm)	λc	1530	1550	1562
Saturate Output Power (dBm) ※	Po	--	--	20
Input Power (dBm)	Pi	-30	--	+6
Gain (dB)	G	--	20	32
Noise Figure (dB) ※※	NF	--	4.5	
Output Power Stability (dB)	ΔPo	--	±0.05	±0.1
Input Isolation (dB)	ISOi	30	--	--
Output Isolation (dB)	ISOo	30	--	--
Input Pump Leakage (dBm)	PumpLin	--	--	-35
Output Pump Leakage (dBm)	PumpLout	--	--	-45
Return Loss (dB)	RL	--	--	-45
PDG (dB)	PDG	--	--	0.3
PMD (ps)	PMD	--	--	0.5

※ Optional.

※※ Test at 0dBm input.

Environmental Performance & Electrical Characteristics

Parameters	Symb	Min	Typ	Max
Operation Temperature (℃)	Tw	-5	--	60
Storage Temperature (℃)	Ts	-40	--	80
Humidity (%)	--	10	--	85
Power Voltage (VAC) ※	Vps	85/170	100/240	100/240
Consumption (W) ※※	P	--	--	18

※ 110VAC, 220VAC and -48VDC is optional.
※※ Actual consumption depend on the output power and environment temperature.

Mechanical Dimensions

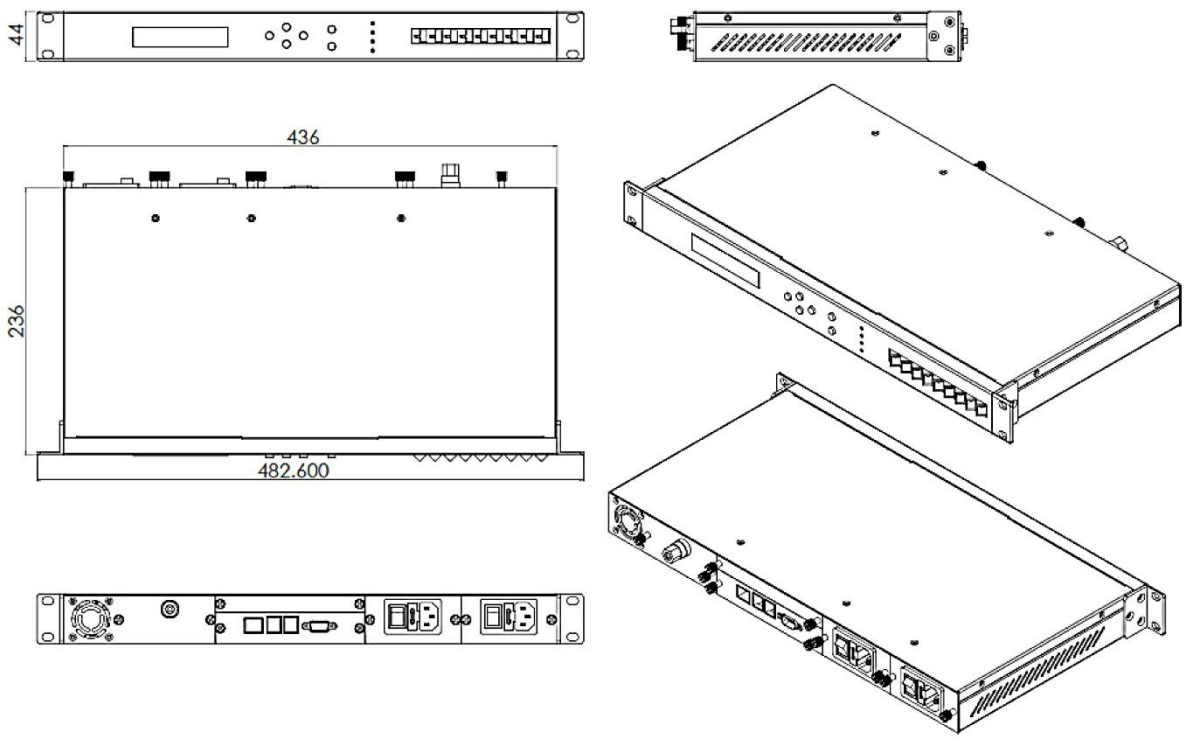

Ordering Information

ID	Type	Operation Mode	Input (dBm)	Housing	Wavelength (nm)
#35919	Pre-Amplifier	AGC	-35~-20dBm	1U 19" Rack Mount	1530nm~1562nm
#35921	Booster Amplifier	APC	-10~+10dBm	1U 19" Rack Mount	1530nm~1562nm
#35902	In-Line Amplifier	AGC	-25~-10dBm	1U 19" Rack Mount	1530nm~1562nm

Note:

If you need even more customization – welcome to contact sales@fs.com.

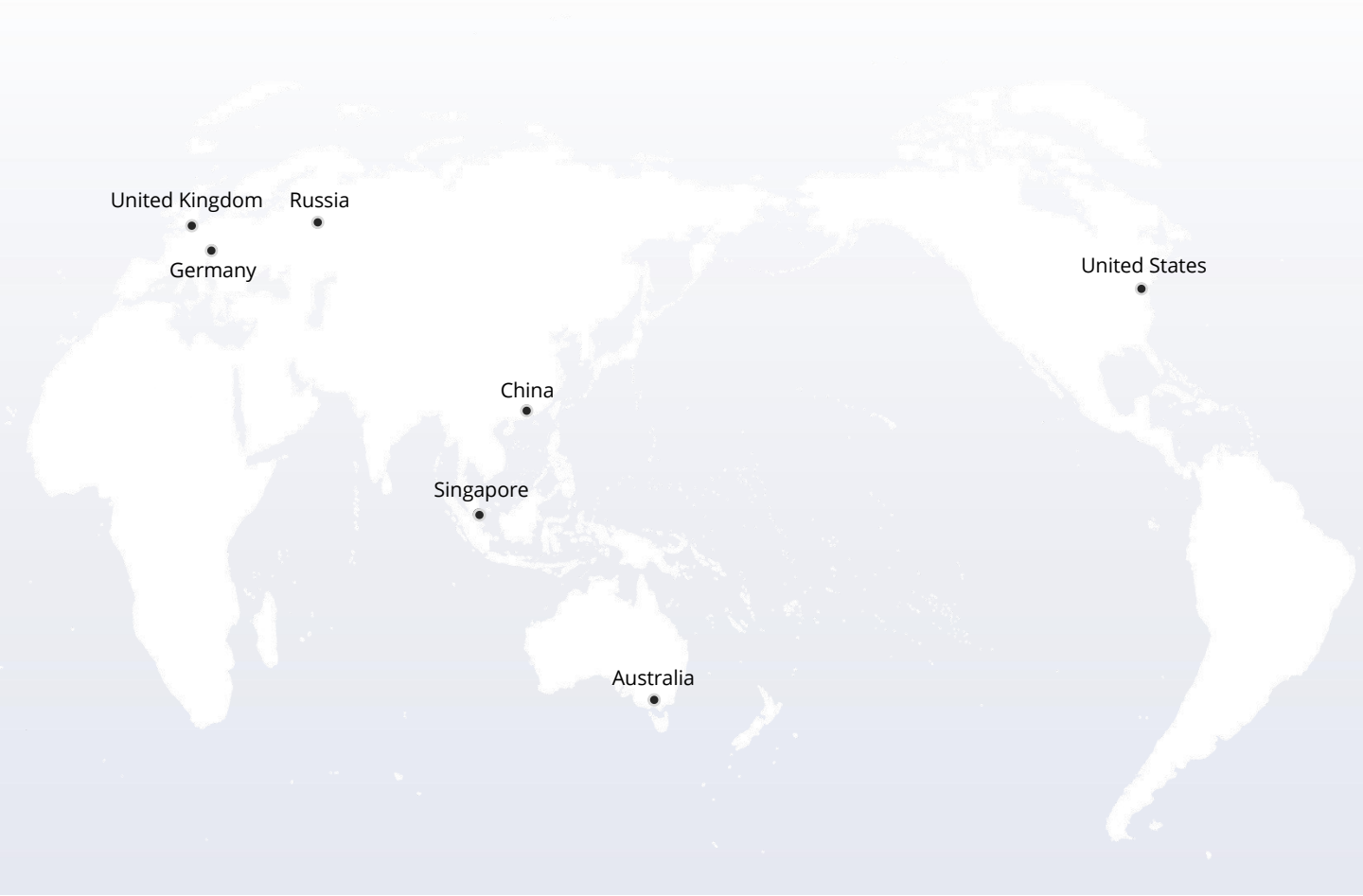

https://www.fs.com

The information in this document is subject to change without notice. FS has made all efforts to ensure the accuracy of the information, but all information in this document does not constitute any kind of warranty.

Copyright © 2009-2022 FS.COM All Rights Reserved.