NETWORKS

FHZ PREMIUM ULTRA FIBER ENCLOSURE USER MANUAL

FS

Safety Information

WARNING: UNMATED CONNECTORS MAY EMIT INVISIBLE LASER RADIATION. DO NOT LOOK DIRECTLY INTO THE END OF THE CONNECTOR. DO NOT INSPECT WITH MAGNIFYING DEVICES. MAINTAIN DUST CAPS ON UNMATED CONNECTORS.

CAUTION: Fiber optic cable is sensitive to excessive pulling, bending, and crushing forces.

Chapter 1 Product Description

FS.COM FHZ series premium ultra HD fiber enclosure can cater for ultra high-density applications of up to 216 fibers per enclosure. It is the ideal for ultra high density fiber applications in data centers, equipment rooms, and central offices.

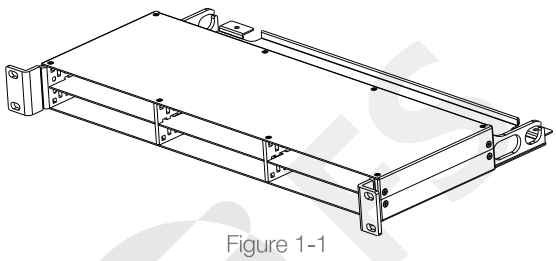

Figure 1-1

Chapter 2 FHZ Cassette Installation (Cassette Not Included)

Up to 6 for FHZ-1UFSP

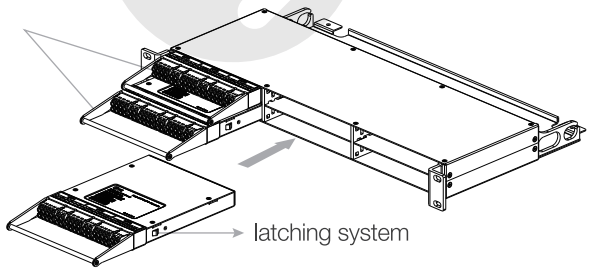

Up to 216 LC fibers with 6pcs FHZ MTP cassettes

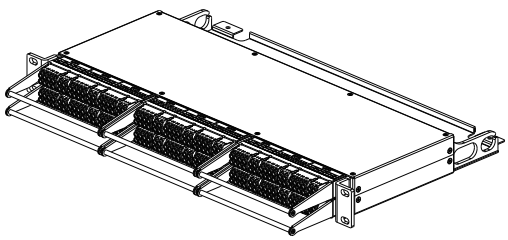

Figure 2-1

Note: Latching system must be fixed.

Chapter 3 Cabling Management

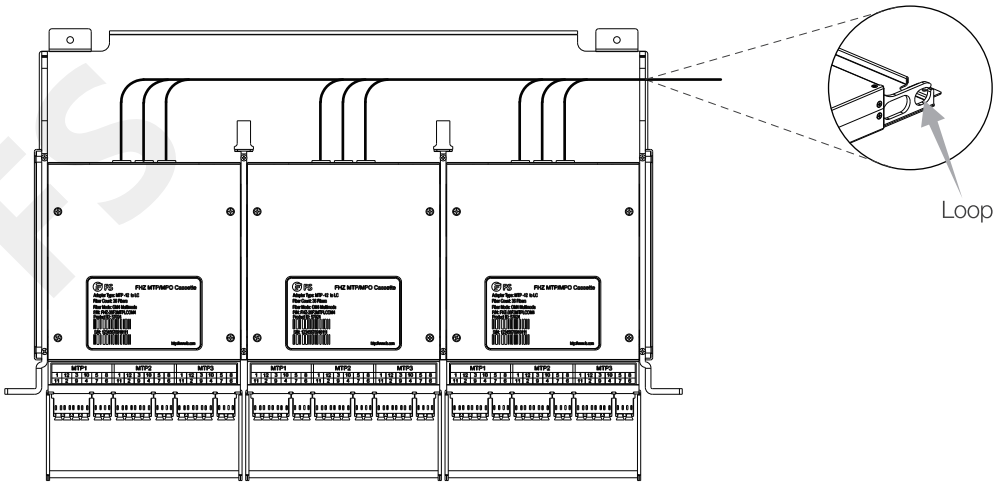

Figure 3-3

Using M6 screws to mount the enclosure.

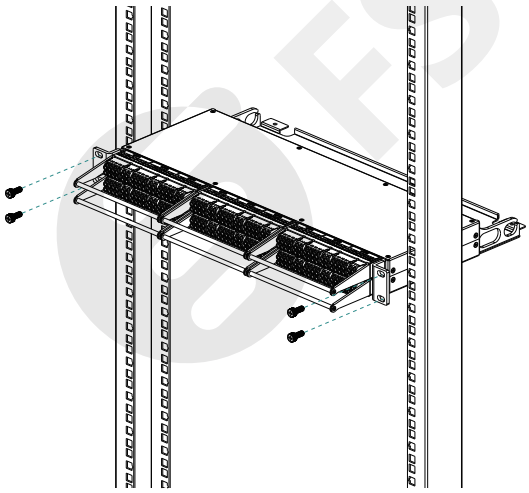

Installation Completed.

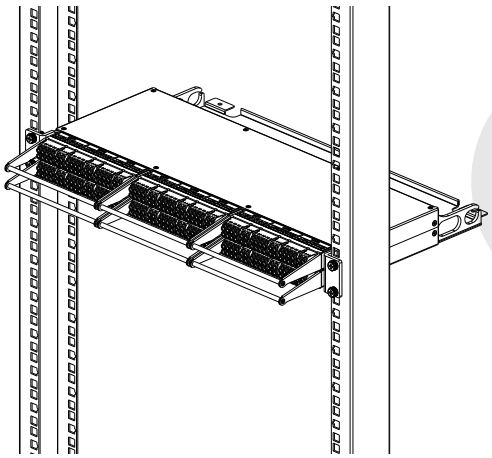

Figure 3-4

Addresses, phone number and fax number also have been listed at www.fs.com. Please e-mail us at sales@fs.com or call us for assistance. All statements, technical information, and recommendations related to the products here are based upon information believed to be reliable or accurate.However, the accuracy or completeness thereof is not guaranteed, and no responsibility is assumed for any inaccuracies. Please contact FS formore information.

North America (Seattle)

Fiberstore INC

820 SW 34th Street Bldg W7 Suite H,

Renton, WA 98057,

United States

Tel: +1(877) 205 5306

Eastern America

FS.COM INC 380 Centerpoint Blvd

New Castle, DE 19720

United States

Europe (Germany)

FS.COM GmbH

NOVA Gewerbepark Building 7,

Am Gfild 7, 85375 Neufahrn bei Munich, Germany

Tel:+49 (0) 89 414176412

Europe (United Kingdom)

Fiberstore LTD 2nd Floor, Quayside Tower,

Broad Street, Birmingham, B1 2HF

Tel:+44 (0) 121 698 2099

Asia (China)

Fiberstore Co., Limited Room

2702, 27 Floor Yisibo Software Building

Haitian Second Road, Yuehai Street

Nanshan District Shenzhen, 518054, China

Tel:+86 (755) 8300 3611

Australia

FS.COM PTY LTD

57-59 Edison Rd, Dandenong South,

VIC3175, Austrilia

ABN 71 620 545 502

Tel:+61 (2)8317 1119

For more information

Visit Us at www.fs.com